ISSN: 0256-307X

中国物理快报
Chinese Physics Letters

Volume 34 Number 2 February 2017

A Series Journal of the Chinese Physical Society
Distributed by IOP Publishing

Online: http://iopscience.iop.org/0256-307X
http://cpl.iphy.ac.cn

TRUST FOR AUTHORS
— CHINESE PHYSICS LETTERS

CHINESE PHYSICAL SOCIETY
IOP Publishing

An Improved Experiment to Determine the 'Past of a Particle' in the Nested Mach–Zehnder Interferometer *

A. Ben-Israel[1], L. Knips[2,3], J. Dziewior[2,3], J. Meinecke[2,3], A. Danan[1], H. Weinfurter[2,3], L. Vaidman[1]**

[1]*Raymond and Beverly Sackler School of Physics and Astronomy, Tel-Aviv University, Tel-Aviv 69978, Israel*
[2]*Max-Planck-Institut für Quantenoptik, Hans-Kopfermann-Straße 1, Garching 85748, Germany*
[3]*Department für Physik, Ludwig-Maximilians-Universität, München 80797, Germany*

(Received 7 August 2016)

We argue that the modification proposed by Li et al. [Chin. Phys. Lett. 32 (2015) 050303] to the experiment of Danan et al. [Phys. Rev. Lett. 111 (2013) 240402] does not test the past of the photon as characterized by local weak traces. Instead of answering the questions: (i) were the photons in A? (ii) were the photons in B? and (iii) were the photons in C? the proposed experiment measures a degenerate operator answering the questions: (i) were the photons in A? and (ii) were the photons in B and C together? A negative answer to the last question does not tell us if photons were present in B or C. On the other hand, a simple variation of the proposal by Li et al. does provide conceptually better evidence for the past of the pre- and post-selected photon, but this evidence will be in agreement with the results of Danan et al.

PACS: 03.65.Ta, 03.65.Ca, 42.25.Hz DOI: 10.1088/0256-307X/34/2/020301

Li *et al.*[1] recently proposed an 'ideal' experiment designed to determine the past of a particle passing through the nested interferometer analyzed by Danan *et al.*[2] They proposed using an alternative method for observing the location of the photon based on Kerr media to challenge and refute Danan's claim that the past of a photon in this interferometer is described by disconnected paths.

In this Letter, we analyze the method of Li *et al.* and find that their proposed experiment is not a good test of the past of the photon. However, a modification of their experiment does provide a correct alternative measurement of the past of the photon, which, as we believe, will reveal the disconnected paths that Danan *et al.* have characterized.

First, we ask in what way the proposed experiment is 'ideal'. In standard quantum mechanics there is no concept of the particle path or the past of a particle. The past of a particle is not defined, thus there cannot be an 'ideal' way to find it. The approach which does not allow us to talk about particles at intermediate times between measurements saves us from having to consider seemingly paradoxical results, but at the same time limits the possible insights we may gain by considering this concept.

Several approaches have been suggested to allow us to discuss the past of particles in quantum mechanics, associating trajectories to each particle. One of those is the de Broglie–Bohm interpretation of quantum mechanics, in which the trajectories of particles are determined by the wavefunction via a guiding equation.[3] If the wavefunction of the particle is a well-localized wave packet, the Bohmian trajectory of the particle coincides with the trajectory of the wave packet. For an evolving wave packet that splits into several wave packets, of which only one reaches the final destination via a continuous path, the trajectory of this packet can be defined as the path of the particle. This is the 'common sense' approach advocated by Wheeler:[4] the particle went through this path because it could not have come through any other path. Recently, Vaidman[5] proposed another definition: the past of the particle is described by the locations where a particle leaves a weak trace. The experiment of Danan *et al.* was designed to measure this weak trace.

The measurement of the trace in the experiment of Danan *et al.* invariably spoils the perfect interference of the inner interferometer and creates some leakage in its dark port. Apparently, this leakage is what made the original experiment 'not ideal' in the eyes of Li *et al.* This view is supported by the fact that the leakage is crucial for explaining the results of Danan *et al.*: the meter of their experiment was a transversal degree of freedom of the photon itself. The trace, 'written' on the wave function of the photon, could not be observed by the quad-cell detector placed outside the interferometer without the leakage towards it. From this perspective the proposal of Li *et al.* to place the meter inside the interferometer is a desired change. The trace is recorded where it is created. Therefore, we do not need to confront the question: how does the external detector obtain the information about the trace inside the inner interferometer if only a tiny leakage passes from the place with the trace toward the detector?

However, the conduction of a measurement which

*Supported by the German-Israeli Foundation for Scientific Research and Development under Grant No I-1275-303.14.
**Corresponding author. Email: vaidman@post.tau.ac.il
© 2017 Chinese Physical Society and IOP Publishing Ltd

JUST FOR AUTHORS — CHINESE PHYSICS LETTERS

detects the weak trace of the photon inside the interferometer without testing the traces in each of its arms separately, is a step in the wrong direction. The setup with the nested interferometers is analogous to a three-box paradox,[6] where the paths of the interferometer correspond to three boxes. We know that if we look in arm A we find the photon with certainty and also, if we look at arm C instead, we find it there with certainty, too. However, if we test the presence of the photon anywhere in B or C without resolving these two paths, we are certain not to find it, since it is equivalent to testing its presence in A. It has been proven[6] that if a usual (strong) measurement of an observable performed on the pre- and post-selected system yields a particular eigenvalue with certainty, a weak measurement of this observable must yield the same value. The experiment of Li *et al.* is such a weak measurement of the projection onto B and C together, thus it must yield the null result.

The outcomes of weak measurements are weak values, and the experiment can be understood also in this language. In the three-box setup, the weak values of the projection operators on different boxes are

$$(\boldsymbol{P}_C)_{\mathrm{w}} = 1,\ (\boldsymbol{P}_A)_{\mathrm{w}} = 1,\ (\boldsymbol{P}_B)_{\mathrm{w}} = -1. \tag{1}$$

The weak values are additive, thus

$$(\boldsymbol{P}_B + \boldsymbol{P}_C)_{\mathrm{w}} = (\boldsymbol{P}_B)_{\mathrm{w}} + (\boldsymbol{P}_C)_{\mathrm{w}} = -1 + 1 = 0. \tag{2}$$

Vaidman's principle is that the pre- and post-selected photon was in every place where it left a local trace. Any nonvanishing weak value of a local operator in a particular place leads to a local weak trace. The experiment of Li *et al.* does not observe all these local traces. It weakly measures the projection onto B and C together.

Even though according to the definition proposed by Vaidman the photon was in B, and also was in C, the influences of the photon in the two places on the meter of Li *et al.* cancel each other out. The meter in their experiment is the phase acquired by the probe photon passing in the Kerr media in the middle of the inner interferometer, see Fig. 1(a). The photon influences the probe photon due to its presence in both arms B and C, but the influences are in opposite directions resulting in the null outcome. This is possible because contrary to the case of a photon that is preselected only in a superposition of being in different arms of the interferometer causing a mixture of evolutions of the probe photon, the pre- and post-selected photon yields a superposition of the evolutions of the probe photon[7] which can cancel each other out.

A small modification of the proposed experiment is suitable for measuring the local trace inside the interferometer. We just have to move the path of the probe photon near the place where we intend to observe the trace, see Fig. 1(b). Repeating the experiment with a probe photon passing in different regions inside the nested interferometer (or adding more photon-meter interferometers) will provide the full information about the past of the photon. These local measurements will necessarily destroy the perfect interference of the inner interferometer leading to some unavoidable leakage. However, the weak trace left by this leakage is vanishingly small. Indeed, an identical coupling in all arms of the interferometer which causes the traces of order ϵ in arms A, B, and C will lead to the trace in the dark port proportional to ϵ^2. In the weak limit of $\epsilon \to 0$ the ratio of the magnitudes of these traces goes to zero and the trace proportional to ϵ^2 can be ignored. In this sense, the photons are present (leave a trace) in the arms B and C inside the inner interferometer, but not in the arms leading in and out of it. For more discussion, see Refs. [8–11].

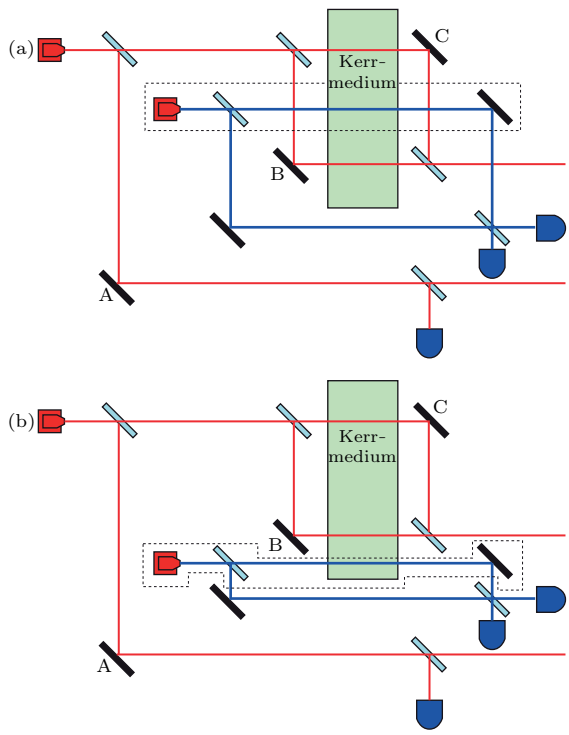

Fig. 1. (a) The experimental setup proposed by Li *et al.* in which the probe photon's path runs through the middle of the Kerr media. (b) Our proposed modification, in which the path of the probe photon is moved to a region in the Kerr media in close proximity to the arm of the interferometer wherein the presence of the photon is tested.

The modified proposal of Li *et al.* is conceptually a better experiment for observing the past of a photon defined as the regions where it leaves a weak trace. It is a direct measurement with an external device. Moreover, it is a genuinely quantum experiment since its results cannot be explained by Maxwell's equations of the electromagnetic field of the laser, as they were explained by Danan *et al.* in their experiment. The experiment with the Kerr media is much more chal-

JUST FOR AUTHORS
— CHINESE PHYSICS LETTERS

lenging, but apparently technologically feasible.[12,13] The most promising design is to use fibers of separate Kerr media for each path of the interferometer. Still, the experiment by Danan *et al.*, even if it has an alternative explanation, is a good demonstration of the past of a pre- and post-selected photon.

In conclusion, the null result claimed by Li *et al.* is obtained not because there is no effect but rather because the effects of the photon from arms B and C of the inner interferometer cancel each other out. Shifting the path of the meter interferometer from the center of the inner interferometer would reveal the weak trace of the photon there. Such a modified experiment will be an improvement over the experiment by Danan *et al.*, and is worth performing.

References

[1] Li F, Hashmi F A, Zhang J X and Zhu S Y 2015 *Chin. Phys. Lett.* **32** 050303

[2] Danan A, Farfurnik D, Bar-Ad S and Vaidman L 2013 *Phys. Rev. Lett.* **111** 240402

[3] Bohm D 1952 *Phys. Rev.* **85** 166

[4] Wheeler J A 1978 *Mathematical Foundations of Quantum Theory* (New York: Academic Press) p 9

[5] Vaidman L 2013 *Phys. Rev.* A **87** 052104

[6] Aharonov Y and Vaidman L 1991 *J. Phys.* A **24** 2315

[7] Aharonov Y, Anandan J, Popescu S and Vaidman L 1990 *Phys. Rev. Lett.* **64** 2965

[8] Potoček V and Ferenczi G 2015 *Phys. Rev.* A **92** 023829

[9] Vaidman L 2016 *Phys. Rev.* A **93** 017801

[10] Salih H 2015 *Front. Phys.* **3** 47

[11] Vaidman L, Danan A, Farfurnik D and Bar-Ad S 2015 *Front. Phys.* **3** 48

[12] Matsuda N et al 2009 *Nat. Photon.* **3** 95

[13] Feizpour A, Xing X and Steinberg A M 2011 *Phys. Rev. Lett.* **107** 133603

JUST FOR AUTHORS
— CHINESE PHYSICS LETTERS

Chinese Physics Letters

Volume 34 Number 2 February 2017

GENERAL

020201 A New Fractional Model for the Falling Body Problem
A. Ebaid, B. Masaedeh, E. El-Zahar

020301 An Improved Experiment to Determine the 'Past of a Particle' in the Nested Mach–Zehnder Interferometer
A. Ben-Israel, L. Knips, J. Dziewior, J. Meinecke, A. Danan, H. Weinfurter, L. Vaidman

020302 Proof of Security of a Semi-Device-Independent Quantum Key Distribution Protocol
Peng Xu, Wan-Su Bao, Hong-Wei Li, Yang Wang, Hai-Ze Bao

020501 Spin-1/2 Fermion Gas in One-Dimensional Harmonic Trap with Attractive Delta Function Interaction
Ya-Hui Wang, Zhong-Qi Ma

020502 Note on Divergence of the Chapman–Enskog Expansion for Solving Boltzmann Equation
Nan-Xian Chen, Bo-Hua Sun

020601 Realization of Closed-Loop Operation of Optical Lattice Clock Based on ^{171}Yb
Hui Liu, Xi Zhang, Kun-Liang Jiang, Jin-Qi Wang, Qiang Zhu, Zhuan-Xian Xiong, Ling-Xiang He, Bao-Long Lyu

NUCLEAR PHYSICS

022401 Thick Target Neutron Production on Aluminum and Copper by 40 MeV Deuterons
Chang-Lin Lan, Jia Wang, Tao Ye, Wei-Li Sun, Meng Peng

FUNDAMENTAL AREAS OF PHENOMENOLOGY(INCLUDING APPLICATIONS)

024201 Passively Q-Switched Ho:SSO Laser by Use of a Cr^{2+}:ZnSe Saturable Absorber
Xiao-Tao Yang, Long Liu, Wen-Qiang Xie

024202 Static and Dynamic Analysis of Lasing Action from Single and Coupled Photonic Crystal Nanocavity Lasers
Peng-Chao Zhao, Fan Qi, Ai-Yi Qi, Yu-Fei Wang, Wan-Hua Zheng

024203 Supercontinuum Generation in Lithium Niobate Ridge Waveguides Fabricated by Proton Exchange and Ion Beam Enhanced Etching
Bing-Xi Xiang, Lei Wang, Yu-Jie Ma, Li Yu, Huang-Pu Han, Shuang-Chen Ruan

024204 Refractive Plasmonic Sensor Based on Fano Resonances in an Optical System
Wei-Jie Mai, Yi-Lin Wang, Yun-Yun Zhang, Lu-Na Cui, Li Yu

024205 Spectral-Phase-Modulated Cross-Polarized Wave for Chirped Pulse Amplifier with High Contrast Ratio
Shuang Qin, Zhao-Hua Wang, Shuai-Shuai Yang, Zhong-Wei Shen, Quan-Li Dong, Zhi-Yi Wei

024301 Horizontal–Longitudinal Spatial Correlation of Acoustic Field with Deep Receiver in the Direct Zone in Deep Water
Kun-De Yang, Hui Li, Rui Duan

PHYSICS OF GASES, PLASMAS, AND ELECTRIC DISCHARGES

025101 A CMOS Compatible MEMS Pirani Vacuum Gauge with Monocrystal Silicon Heaters and Heat Sinks
Le-Min Zhang, Bin-Bin Jiao, Shi-Chang Yun, Yan-Mei Kong, Chih-Wei Ku, Da-Peng Chen

025201 Nonlinear Energy Cascading in Turbulence during the Internal Reconnection Event at the Sino-United Spherical Tokamak
Song Chai, Yu-Hong Xu, Zhe Gao, Wen-Hao Wang, Yang-Qing Liu, Yi Tan

025202 Growth of Single-Crystalline Silicon Nanocone Arrays by Plasma Sputtering Reaction Deposition
Zhi-Cheng Wu, Lei-Lei Guan, Hui Li, Jia-Da Wu, Jian Sun, Ning Xu,

JUST FOR AUTHORS
— CHINESE PHYSICS LETTERS

CONDENSED MATTER: STRUCTURE, MECHANICAL AND THERMAL PROPERTIES

026101 Radiation Damage Analysis of Individual Subcells for GaInP/GaAs/Ge Solar Cells Using Photoluminescence Measurements
Yong Zheng, Tian-Cheng Yi, Jun-Ling Wang, Peng-Fei Xiao, Rong Wang

026201 Weak Anti-Localization and Quantum Oscillations in Topological Crystalline Insulator PbTe
Ke-Jie Wang, Wei Wang, Min-Hao Zhang, Xiao-Qian Zhang, Pei Yang, Bo Liu, Ming Gao, Da-Wei Huang, Jun-Ran Zhang, Yu-Jie Liu, Xue-Feng Wang, Feng-Qiu Wang, Liang He, Yong-Bing Xu, Rong Zhang

026401 Up-Hill Diffusion of Phase-Separated FeCu Melt by Molecular Dynamics Simulation
Wen-Chao Cui, Chuan-Xiao Peng, Yun Cheng, Kai-Kai Song, Xue-Lian Li, Zhen-Ting Zhang, Sheng-Zhong Yuan, Li Wang

026402 Intrinsic Features of an Ideal Glass
Deyan Sun, Cheng Shang, Zhipan Liu, Xingao Gong

CONDENSED MATTER: ELECTRONIC STRUCTURE, ELECTRICAL, MAGNETIC, AND OPTICAL PROPERTIES

027101 D-Type Anti-Ferromagnetic Ground State in $Ca_2Mn_2O_5$
Pan Liu, Wei-Hua Wang, Wei-Chao Wang, Ya-Hui Cheng, Feng Lu, Hui Liu

027102 Molybdenum Carbide: A Stable Topological Semimetal with Line Nodes and Triply Degenerate Points
Jian-Peng Sun, Dong Zhang, Kai Chang

027201 Electron Transport Properties of Two-Dimensional Si_1P_1 Molecular Junctions
Rui-Fang Gao, Wen-Yong Su, Feng-Wang, Wan-Xiang Feng

027301 Influence of the Diamond Layer on the Electrical Characteristics of AlGaN/GaN High-Electron-Mobility Transistors
Xue-Feng Zheng, Ao-Chen Wang, Xiao-Hui Hou, Ying-Zhe Wang, Hao-Yu Wen, Chong Wang, Yang Lu, Wei Mao, Xiao-Hua Ma, Yue Hao

027302 Ballistic Transport through a Strained Region on Monolayer Phosphorene
Yi Ren, Fang Cheng

027501 Micromagnetic Studies of Finite Temperature M–H Loops for FePt-C Media
Long-Ze Wang, Jing-Yue Miao, Zhen Zhao, Chuan Liu, Dan Wei

027701 Improved Polarization Retention of $BiFeO_3$ Thin Films Using $GdScO_3$ (110) Substrates
Shuai-Qi Xu, Yan Zhang, Hui-Zhen Guo, Wen-Ping Geng, Zi-Long Bai, An-Quan Jiang

CROSS-DISCIPLINARY PHYSICS AND RELATED AREAS OF SCIENCE AND TECHNOLOGY

028101 Low-Temperature Solid State Synthesis and Characterization of Superconducting Vanadium Nitride
Liang-Biao Wang, Zheng-Song Lou, Ke-Yan Bao, Wei-Qiao Liu, Quan-Fa Zhou

028201 TiO_2-Loaded WO_3 Composite Films for Enhancement of Photocurrent Density
Wen-Gui Wang, Li Zhu, Yu-Yan Weng, Wen Dong

028701 Initiation Mechanism of Kinesin's Neck Linker Docking Process
Yi-Zhao Geng, Hui Zhang, Gang Lyu, Qing Ji

028801 The 18.3% Silicon Solar Cells with Nano-Structured Surface and Rear Emitter
Jun-Na Zhang, Lei Wang, Zhun Dai, Xun Tang, You-Bo Liu, De-Ren Yang

028802 Application of AlGaInP with Sb Incorporation in Lattice-Matched 5-Junction Tandem Solar Cells
Yang Zhang, Qing Wang, Xiao-Bin Zhang, Na Peng, Zhen-Qi Liu, Bing-Zhen Chen, Shan-Shan Huang, Zhi-Yong Wang

028901 Evolutionary Games in Two-Layer Networks with the Introduction of Dominant Strategy
Chang-Quan Chen, Qiong-Lin Dai, Wen-Chen Han, Jun-Zhong Yang

JUST FOR AUTHORS
— CHINESE PHYSICS LETTERS